Defrost Thermostat for Refrigerator
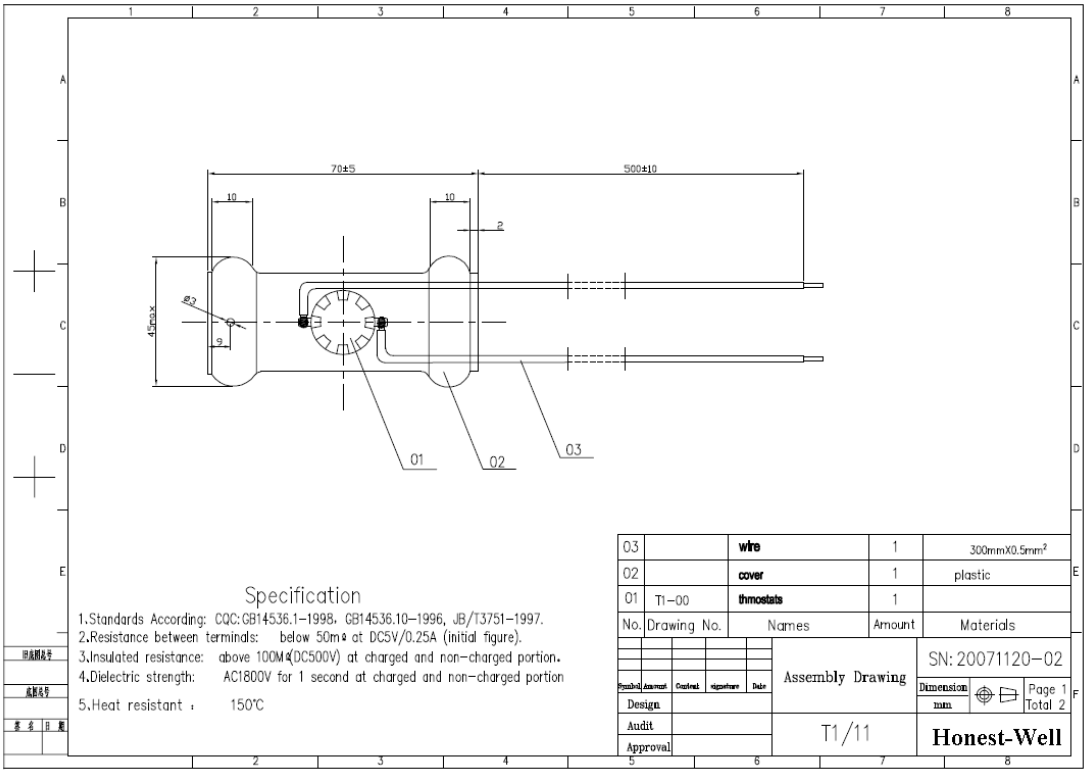
(SV400180)